

Husqvarna®



BS 75, BS 110

EN Operator's manual 2-31

Contents

Introduction..... 2
Safety..... 5
Operation..... 9
Maintenance..... 15
Troubleshooting..... 19
Transportation, storage and disposal..... 21
Technical data..... 24
Accessories..... 28
Declaration of Conformity..... 30

Introduction

Product description

The product is a pedestrian-controlled floor scraper for surfaces of different hardness.

Intended use

The product is used to remove surface materials with different hardness from concrete floors, wood floors and soft subfloors. Use the product to remove hardwood, ceramics, linoleum, vinyl, carpet, adhesives and glue. Do not use the product for other tasks.

The product is used in industrial operations by professional operators.

Product overview BS 75

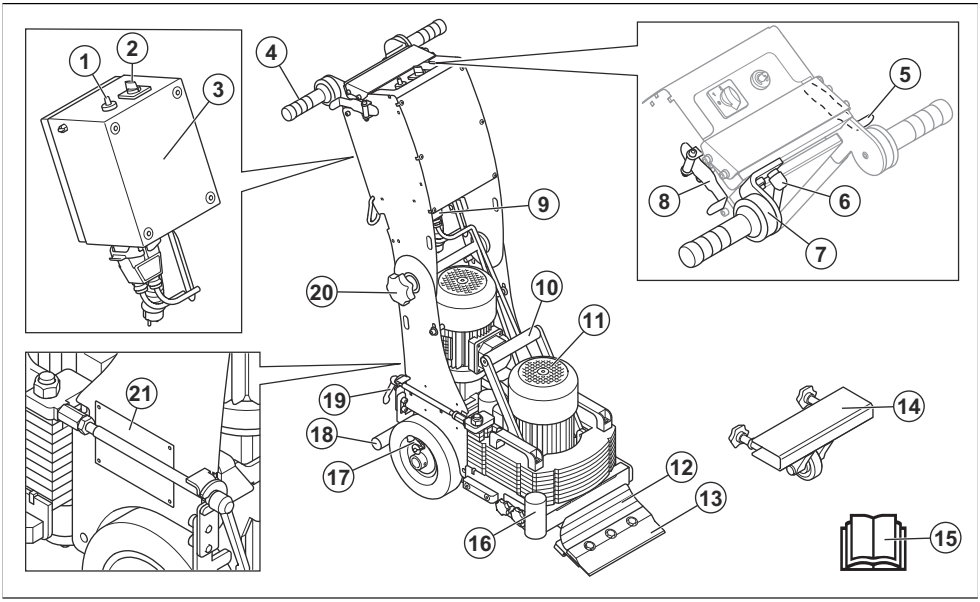

1. Speed control
2. Start/stop switch and function selection switch
3. Electrical enclosure
4. Shock absorbing handle
5. Forward drive lever
6. Clamp lever for adjustable handle
7. Adjustable handle
8. Rearward drive lever
9. Power connector
10. Lifting handle
11. Vibration motor
12. Tool holder
13. Blade
14. Blade guard
15. Operator's manual
16. Connection for dust extraction hose
17. Drive wheel with locking pin
18. Foot support

19. Lever, used to disassemble the product
20. Handle adjustment knob
21. Type plate

Product overview BS 110

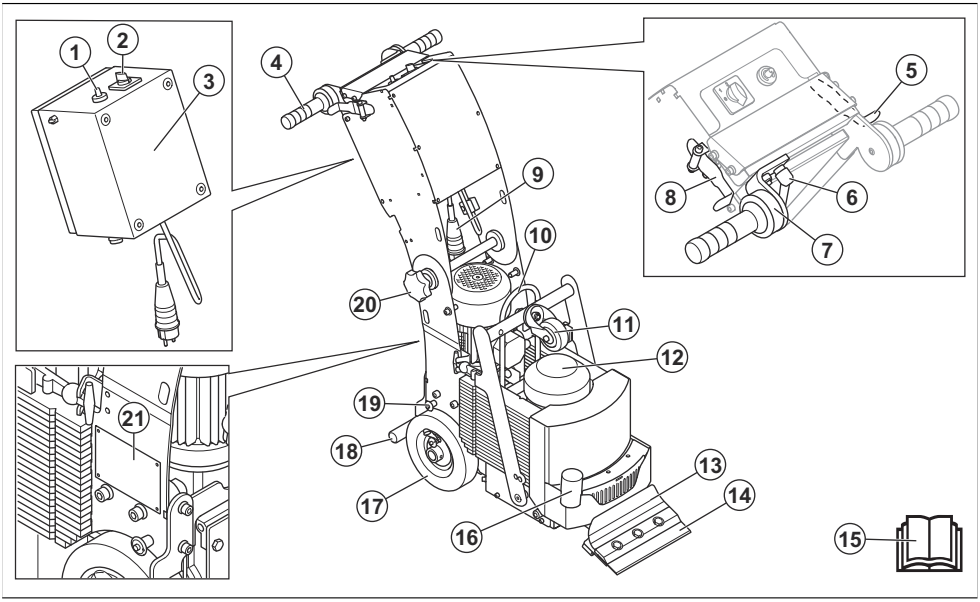

1. Speed control
2. Start/stop switch and function selection switch
3. Electrical enclosure
4. Shock absorbing handle
5. Forward drive lever
6. Clamp lever for adjustable handle
7. Adjustable handle
8. Rearward drive lever
9. Power connector
10. Lifting eye
11. Transport wheel
12. Vibration motor
13. Tool holder
14. Blade
15. Operator's manual
16. Connection for dust extraction hose
17. Drive wheel with locking pin
18. Foot support
19. Locking pin for the front transport wheel
20. Handle adjustment knob
21. Type plate

Symbols on the product



WARNING: This product can be dangerous and cause serious injury or death to the operator or others. Be careful and use the product correctly.



High voltage.



Lifting point on the product.



Read the manual carefully and make sure that you understand the instructions before you use the product.



Use an approved respiratory protection.



Use approved hearing protection.



Use approved eye protection.



Use approved protective gloves with Kevlar.



Use approved protective boots



Stop.



Move rearward.



Move forward.



Fast.



Slow.



Tool engaged.



This product is in compliance with applicable EU directives.

Note: Other symbols/decals on the product refer to special certification requirements for some markets.

Type plate

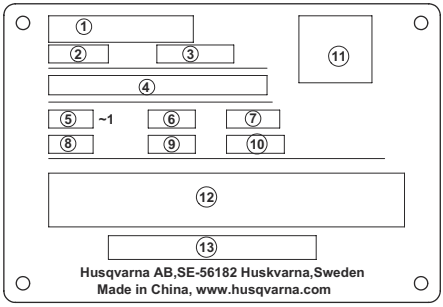

1. Husqvarna logo
2. Model
3. Product number
4. Husqvarna identity (HID)
5. Rated voltage
6. Frequency
7. Rated power
8. Rated current
9. Product weight
10. Production year
11. Scannable code
12. Symbols
13. UL statement [1]

Product damage

We are not responsible for damages to our product if:

- the product is incorrectly repaired.
- the product is repaired with parts that are not from the manufacturer or not approved by the manufacturer.
- the product has an accessory that is not from the manufacturer or not approved by the manufacturer.
- the product is not repaired at an approved service center or by an approved authority.

[1] Conforms to UL STD.561, Cert. to CSA STD. C22.2 No. 10

Safety definitions

Warnings, cautions and notes are used to point out specially important parts of the manual.



WARNING: Used if there is a risk of injury or death for the operator or bystanders if the instructions in the manual are not obeyed.



CAUTION: Used if there is a risk of damage to the product, other materials or the adjacent area if the instructions in the manual are not obeyed.

Note: Used to give more information that is necessary in a given situation.

General safety instructions



WARNING: Read the warning instructions that follow before you use the product.

- This product is a dangerous tool if you are not careful or if you use the product incorrectly. This product can cause serious injury or death to the operator or others. Before you use the product, you must read and understand the contents of this operator's manual.
- This product is not intended for use by persons (including children) with reduced physical, sensory or mental capabilities, or lack of experience and knowledge.
- Save all warnings and instructions.
- Comply with all applicable laws and regulations.
- The operator and the employer of the operator must know and prevent the risks during operation of the product.
- Do not let a person operate the product unless they read and understand the contents of the operator's manual.
- Do not operate the product unless you receive training before use. Make sure that all operators receive training.
- Do not let a child operate the product.
- Only let approved persons operate the product.
- The operator is responsible for accidents that occur to other persons or their property.
- Do not use the product if you are tired, ill, or under the influence of alcohol, drugs or medicine.
- Always be careful and use your common sense.
- This product produces an electromagnetic field during operation. This field can under some circumstances interfere with active or passive medical implants. To decrease the risk of serious injury or death, we recommend persons with medical implants to speak to their physician and the medical implant manufacturer before operating this product.
- Keep the product clean. Make sure that you can clearly read signs and decals.
- Do not use the product if it is damaged.
- Do not make modifications to this product.
- Do not operate the product if it is possible that other persons have made modifications to the product.

Safety instructions for operation



WARNING: Read the warning instructions that follow before you use the product.

- Use personal protective equipment. Refer to *Personal protective equipment on page 6*.
- Overexposure to vibration can cause circulatory damage or nerve damage to persons with decreased blood circulation. Get medical aid if you have symptoms of overexposure to vibration. These symptoms include numbness, loss of feeling, tingling, pricking, pain, loss of strength, changes in skin color or condition. These symptoms usually show in the fingers, hands or wrists.
- Do not operate the product without all protective covers installed.
- Make sure that you know how to stop the motor quickly in an emergency.
- Before you go away from the product, stop the motor and disconnect the power cord. Make sure that there is no risk of accidental start.
- Make sure that clothing, long hair and jewelry do not get caught in moving parts
- Make sure that you are in a safe and stable position during operation.
- Do not operate the product on vertical surfaces, or on surfaces with a greater gradeability than stated on the type plate.
- Do not operate the product unless you can get aid if an accident occurs
- Always use approved accessories. Speak to your Husqvarna dealer for more information.
- If vibrations occur in the product or the noise level from the product is unusually high, stop the product immediately. Examine the product for damages. Repair damages or let an approved service agent do the repair.
- Do not stand on the product.

- Make sure that there is no blockage in the airflow of the vibration motor.
- Connect the product to a dust collector for removal of the dust.
- Do not pull the hose of the dust collector. The product can fall and cause injury or damage.
- Keep the dust collector on until the motor stops fully.
- Only operate the product from behind with your hands on the handlebar.
- Make sure that there is no grease or oil on the handles.
- Always keep the 2 wheels on the ground during operation.

Vibration safety



WARNING: Read the warning instructions that follow before you use the product.

- During operation of the product, vibrations go from the product to the operator. Regular and frequent operation of the product can cause or increase the degree of injuries to the operator. Injuries can occur in fingers, hands, wrists, arms, shoulders, and/or nerves and blood supply or other body parts. The injuries can be debilitating and/or permanent, and can increase gradually during weeks, months or years. Possible injuries include damage to the blood circulation system, the nervous system, joints, and other body structures.
- Symptoms can occur during operation of the product or at other times. If you have symptoms and continue to operate the product, the symptoms can increase or become permanent. If these or other symptoms occur, get medical aid:
    - Numbness, loss of feeling, tingling, pricking, pain, burning, throbbing, stiffness, clumsiness, loss of strength, changes in skin color or condition.
- Symptoms can increase in cold temperatures. Use warm clothing and keep your hands warm and dry when you operate the product in cold environments.
- Do maintenance on and operate the product as given in the operator's manual, to keep a correct vibration level.
- The product has a vibration damping system that decreases the vibrations from the handles to the operator. Let the product do the work. Do not push the product with force. Hold the product at the handles lightly, but make sure that you control the product and operate it safely. Do not push the handles into the end stops more than necessary.
- Keep your hands on the handle or handles only. Keep all other body parts away from the product.
- Stop the product immediately if strong vibrations suddenly occurs. Do not continue the operation before the cause of the increased vibrations is removed.

Dust safety



WARNING: Read the warning instructions that follow before you use the product.

- Operation of the product can cause dust in the air. Dust can cause serious injury and permanent health problems. Silica dust is regulated as harmful by several authorities. These are examples of such health problems:
    - The fatal lung diseases chronic bronchitis, silicosis and pulmonary fibrosis
    - Cancer
    - Birth defects
    - Skin inflammation
- Use correct equipment to decrease the quantity of dust and fumes in the air and to decrease dust on work equipment, surfaces, clothing and body parts. Examples of controls are dust collection systems and water sprays to bind dust. Decrease dust at the source where possible. Make sure that the equipment is correctly installed and used and that regular maintenance is done.
- Use approved respiratory protection. Make sure that the respiratory protection is applicable for the dangerous materials in the work area.
- Make sure that the airflow is sufficient in the work area.

Noise safety



WARNING: Read the warning instructions that follow before you use the product.

- High noise levels and long-term exposure to noise can cause noise-induced hearing loss.
- To keep the noise level to a minimum, do maintenance on and operate the product as given in the operator's manual.
- Use approved hearing protection while you operate the product.
- Listen for warning signals and voices when you use hearing protection. Remove the hearing protection when the product is stopped, unless hearing protection is necessary for the noise level in the work area.

Personal protective equipment



WARNING: Read the warning instructions that follow before you use the product.

- Always use approved personal protective equipment when you operate the product. Personal protective equipment cannot fully prevent injury but it decreases the degree of injury if an accident does

occur. Let your dealer help you select the correct personal protective equipment.
- Regularly do a check of the condition of the personal protective equipment.
- Use approved hearing protection.
- Use approved respiratory protection.
- Use approved eye protection with side protection.
- Use protective gloves with Kevlar.
- Use boots with steel toe-cap and non-slip sole.
- Use approved work clothing or equivalent close-fitting clothing that has long sleeves and long legs.

Fire extinguisher

- Keep a fire extinguisher near during operation.
- Use a powder fire extinguisher or a carbon dioxide fire extinguisher.

Work area safety



WARNING: Read the warning instructions that follow before you use the product.

- Do not use the product in fog, rain, strong winds, cold weather, risk of lightning or other bad weather conditions.
- Do not use the product in areas where fire or explosions can occur.
- Keep children, bystanders and animals away from the work area and at a safe distance from the product. A safe distance is 2 m.
- Make sure that only approved persons are in the work area.
- Keep the work area clean and sufficiently illuminated.
- Remove objects such as screws, bolts, wires and stones from the work area before you use the product.
- Make sure that there are no cables or hoses in the operation direction of the product.
- Make sure that there is sufficient airflow in the work area.

Electrical safety



WARNING: There is always a risk of shocks from electrical products. Do not use the product in bad weather conditions. Do not touch lightning conductors and metal objects. Always use the product as given in this operator's manual to prevent injury.



WARNING: Always use a power supply with RCD (residual-current device). An RCD decreases the risk of electrical shock.



WARNING: High voltage. There are unprotected parts in the power unit. Always disconnect the power plug before you open the door to the electrical box.



WARNING: In order to avoid a hazard due to inadvertent resetting of the thermal cut-out, this appliance must not be supplied through an external switching device, such as a timer, or connected to a circuit that is regularly switched on and off by the utility.



WARNING: Make sure that the power supply for the product is supplied by separate transformers that are used for industrial purpose only.



CAUTION: The power supply from the product or generator must be sufficient and constant to make sure that the motor operates without problems. Incorrect voltage causes the power consumption and the temperature of the motor to increase until the safety circuit releases. The dimension of the power cord must agree with national and local regulations. The dimension of the mains socket must agree with the amperage for the electrical socket and extension cable of the product.

If the power mains has higher system resistance, short voltage drop can occur when the product is started. This can influence the operation of other products, for example flicker on the lights.

- Make sure that the power, fuse and mains voltage are the same as the voltage shown on the rating plate of the product.
- Always stop the product before you disconnect the power plug.
- Do not use the product if the power cord or power plug is damaged. Hand it in to an approved service center for repair. A damaged power cord can cause serious injury and death.
- Use the power cord correctly. Do not use the power cord to move, pull or disconnect the product. Pull the power plug to disconnect the power cord. Do not pull the power cord.
- Do not operate the product in water depths where the equipment of the product gets wet. The equipment can become damaged and the product can become live and cause injury.
- Keep the product away from rain. Water that goes into the product increases the risk of electrical shock.
- Always disconnect the power cord before you connect or disconnect the connection for the motor cable and the electrical enclosure.

Grounded product instructions

WARNING: Incorrect connection can result in electrical shock. Speak to an approved electrician if you are not sure if your mains outlet is correctly grounded.

Do not do modifications to the power plug from its factory specification. If the power plug or power cord is damaged or must be replaced, speak to your Husqvarna service agent. Obey local regulations and laws.

If you do not fully understand the instructions about the grounded product, speak to an approved electrician.

Use only grounded outdoor extension cables with grounding plugs and grounding outlet that accepts the product power plug.

The product has a grounded power cord and power plug. Always connect the product to a grounded mains outlet. This decreases the risk of electrical shock.

Do not use electrical adapters with the product.

Extension cables

- Use only approved extension cables with sufficient length.
- The rated value on the extension cable must be the same or higher than given on the rating plate of the product.
- Use grounded extension cables.
- When you operate the product outdoors, use an extension cable that is applicable for outdoor operation. This decreases the risk of electrical shock.
- Keep the connection to the extension cable dry and off the ground.
- Keep the extension cable away from heat, oil, sharp edges or moving parts. A damaged cable increases the risk of electrical shock.
- Make sure that the extension cable is in good condition and not damaged.
- Do not use the extension cable while it is wound up. This can cause the extension cable to become too hot.
- Make sure the extension cable is not in the way of the product during operation.

Safety devices on the product

WARNING: Read the warning instructions that follow before you use the product.

- Do not use a product with safety devices that are damaged or do not operate correctly.
- Do a check of the safety devices regularly. If the safety devices are damaged or do not operate correctly, speak to your Husqvarna servicing dealer.
- Do not make modifications to safety devices.

ON/OFF switch

The ON/OFF switch is used to start and stop the power supply to the product.

To do a check of the start/stop and function selection switch

1. Set the start/stop and function selection switch to "0".
2. Connect the product to the power supply.
3. Set the start/stop and function selection switch to "1".
4. Push the forward drive lever. The drive motor starts.
5. Set the start/stop and function selection switch to "2". The drive motor is on and the vibration motor starts.
6. Set the start/stop and function selection switch to "0".
7. Make sure that the drive motor and the vibration motor stops.

Safety instructions for maintenance

WARNING: Read the warning instructions that follow before you use the product.

- Use personal protective equipment. Refer to *Personal protective equipment on page 6*.
- Be careful when you replace the blade, it is very sharp. Use personal protective equipment. Refer to *Personal protective equipment on page 6*.
- Only do the maintenance as given in this operator's manual. Let an approved service agent do all other servicing.
- If the maintenance is not done correctly and regularly, the risk of injury and damage to the product increases.
- Clean the product to remove dangerous material before you do the maintenance.
- Remove the blade before you do the maintenance.
- Before you do the maintenance, stop the motor and disconnect the power plug.
- Do the maintenance of the product on stable level ground.
- Do not do modifications to the product. Modifications that are not approved by the manufacturer can cause serious injury or death.
- Replace damaged, worn or broken parts.
- Always use original accessories and spare parts. Accessories and spare parts that are not approved

by the manufacturer, can cause serious injury or death.
- After maintenance, do a check of the vibration level in the product. If it is not correct, speak to an approved service agent.
- Let an approved service agent do servicing on the product regularly.

Operation

Introduction

WARNING: Before you operate the product, you must read and understand the safety chapter.

To do before you operate the product

1. Read the operator's manual carefully and make sure that you understand the instructions.
2. Read the operator's manual for the dust collector carefully and make sure that you understand the instructions.
3. Use personal protective equipment. Refer to *Personal protective equipment on page 6*.
4. Do daily maintenance. Refer to *Maintenance schedule on page 16*.
5. Make sure that the product is assembled correctly and is not damaged.
6. Make sure that only approved persons are in the work area.
7. Put the product on the work area. Make sure that the transportation of the product to and in the work area is done safely and correctly. Refer to *Transportation, storage and disposal on page 21*.
8. Connect a dust collector to the product. Refer to *To connect a dust collector on page 11*.
9. Adjust the handle to an applicable operation position. Refer to *To adjust the handle height on page 9* and *To adjust the adjustable handle on page 10*.
10. Make sure that the drive wheels are engaged. Refer to *To engage and disengage the drive wheels on page 11*.
11. Install a blade. Refer to *To replace the blade on page 18*.

WARNING: Use protective gloves with Kevlar. The blades are very sharp.

12. Make sure that the blade is sharp. If it is necessary, replace or sharpen the blade. Refer to *To replace the blade on page 18* and *To sharpen the blade on page 18*.
13. If you use a self-scoring blade, make sure that the angles at the ends of the blade (A) are sharp.

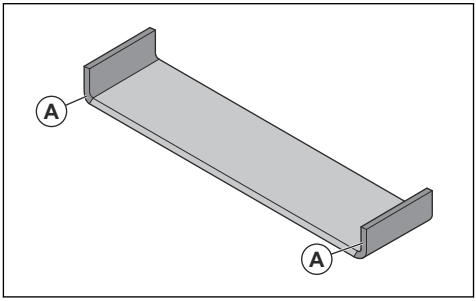

14. Make sure that the start/stop and function selection switch is in the "0" position.

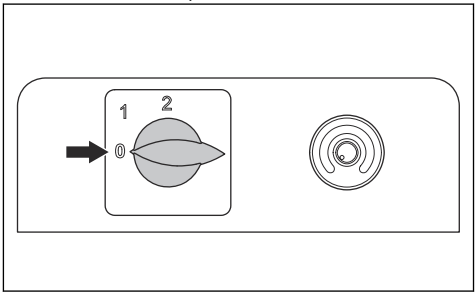

15. Connect the product to a power supply. Refer to *To connect the product to a power supply on page 11*.

To adjust the handle height

1. Loosen the handle adjustment knob.

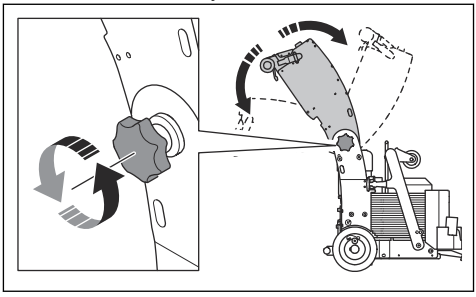

2. Move the handle to an applicable position.
3. Tighten the handle adjustment knob.

To adjust the adjustable handle

1. Loosen the clamp lever.

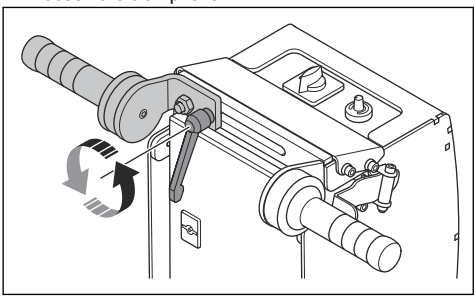

2. Move the adjustable handle to an applicable position.

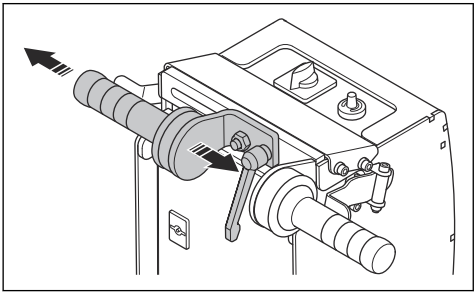

3. Tighten the clamp lever.

To select the correct blade dimension and installation position

WARNING: Use protective gloves with Kevlar. The blades are very sharp.

All available blade types can be used for their approved materials: hardwood, ceramics, linoleum, vinyl, carpet, adhesives and glue. Refer to *Blades on page 29*.

It is necessary to select correct dimension and installation of the blade for the material to remove and the subfloor type. Blades of different dimension can be necessary during the same work operation.

- Select a blade of smaller dimension in these situations:
  a) At the start of an operation.
  b) Operation on materials with strong adhesive.
  c) Operation on hard materials.
- Select a blade of wider dimension in these situations:
  a) Operation on soft materials.
- Select a thicker heavy duty blade for hard materials. A thicker blade also has a longer life.
- Install the blade with the bevel up for removal of materials from concrete floors.

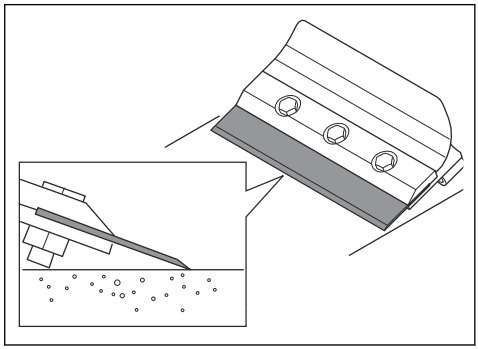

- Install the blade with the bevel down for removal of materials from wood floors and soft subfloors.

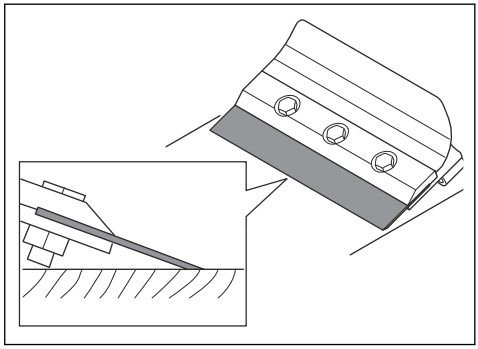

To remove and install the weights BS 110

Refer to *To disassemble and assemble the product BS 75 on page 23* for information on how to remove and install the weight on BS 75.

WARNING: The weights are heavy.

1. Disconnect the power supply.
2. Remove the 2 nuts (A).

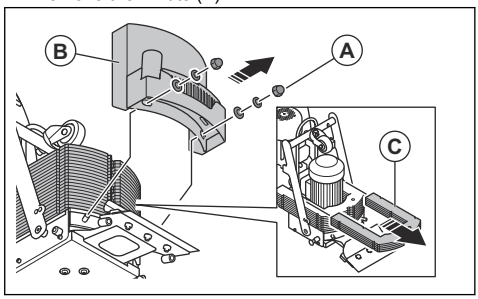

3. Remove the cover (B).
4. Remove the weights (C). Remove 1 weight at a time.
5. Install the weights in the opposite sequence. Install 1 weight at a time.

To connect a dust collector

WARNING: Do not use the dust collector if the dust extraction hose is damaged. The risk increases that you breathe in dust that is dangerous to your health. Use approved respiratory protection.

1. Examine the dust extraction hose for damages.
2. Make sure that the filters in the dust collector are clean and not damaged.
3. Attach the dust extraction hose safely to the connection for dust collector. Use parts with supplied tool and industrial tape. Refer to *Product overview BS 75 on page 2* or *Product overview BS 110 on page 3* for information about where the connection for dust extraction hose is on your product.

To engage and disengage the drive wheels

The drive wheels are engaged when the locking pin is in the inner hole and disengaged when the locking pin is in the outer hole.

1. Tilt the product until the foot support and the handle are on the floor.

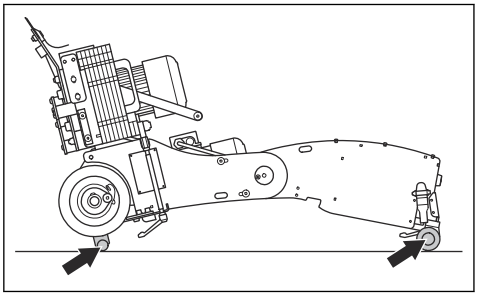

2. Turn the wheels until the 2 holes are aligned and pull out the locking pin.

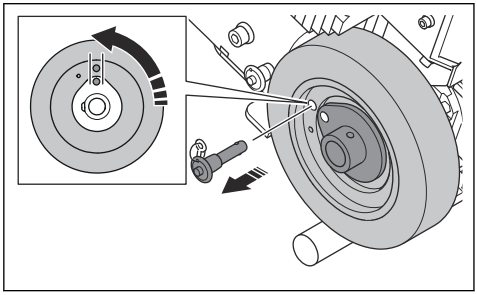

3. Put the locking pin in the inner hole to engage the drive wheels.

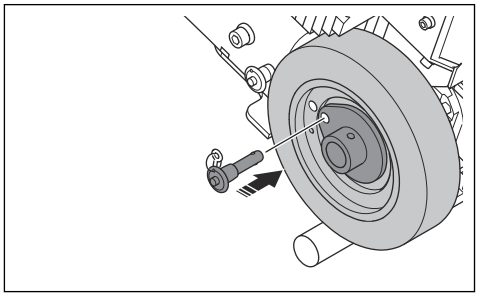

4. To disengage the drive wheels, put the locking pin in the outer hole.

To connect the product to a power supply

1. Connect an applicable extension cable to the power plug of the product.
2. Connect the extension cable to a mains outlet.

To adjust the wheel scraper plates

Use the wheel scraper plates when only you operate the product on tacky surfaces.

1. Disconnect the power supply.
2. Loosen the 2 screws (A).

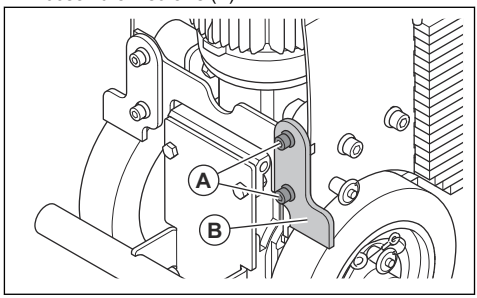

3. Adjust the wheel scraper plate (B).

CAUTION: The wheel scraper plate must touch the wheels but not push hard against the wheel.

4. Tighten the 2 screws.
5. Do the same procedure on the wheel scraper plate on the other wheel.
6. After each use, do the steps that follow:
   a) Lift the wheel scraper plates to the highest position.
   b) Clean the wheel scraper plates.

To start the product

1. Start the dust collector.
2. Make sure that the start/stop and function selection switch is in the "0" position and the product is connected to the power supply.

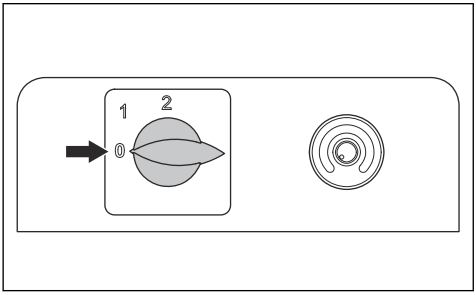

3. Turn the speed control counterclockwise to the lowest speed.

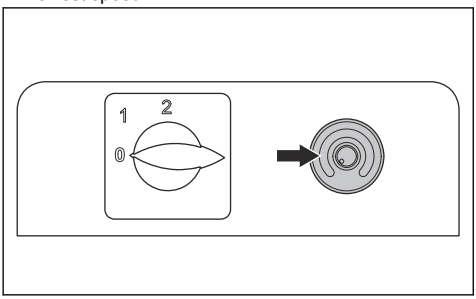

4. Turn the function selection switch to the "1" or the "2" position.

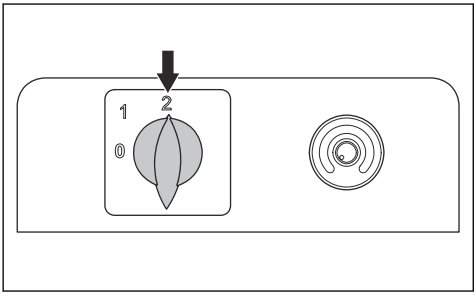

Note: The "1" position energizes the drive motor. The "2" position energizes the drive motor and starts the vibration motor.

5. Turn the speed control slowly clockwise to the necessary speed.

To operate the product

WARNING: If the product stops of an unknown cause during operation, immediately set the start/stop and function selection switch to "0".

1. Make sure that the function selection switch is set correctly for the operation. Without vibrations: position "1". With vibrations: position "2".
2. Push the drive levers to move the product.

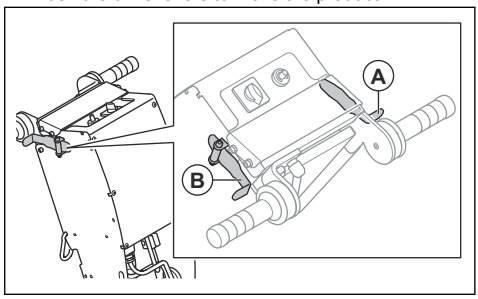

   a) To move the product forward, push the forward drive lever (A). The product moves forward at the set speed.
   b) To move the product rearward, release the drive lever (A). When the movement stops, push the rearward drive lever (B).

WARNING: Rearward movement of the product is always at maximum speed.

   c) To move the product forward at maximum speed, push the forward drive lever (A) and the rearward drive lever (B).

3. Turn the speed control to adjust the set forward speed during operation.

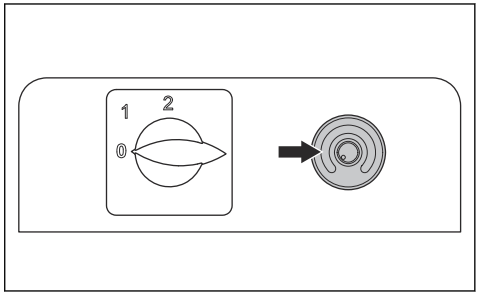

To operate the product near a wall

- To operate the product near a wall, adjust the adjustable handle. Refer to *To adjust the adjustable handle on page 10*.

To stop the product

1. Turn the speed control counterclockwise to the lowest speed.

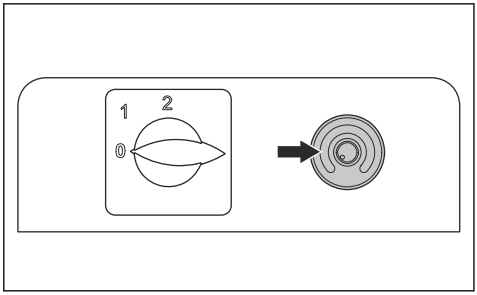

2. Release the drive levers.
3. Turn the start/stop and function selection switch to the "0" position.

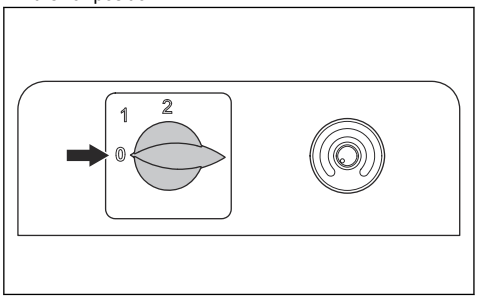

4. Stop the dust collector.
5. Disconnect the power supply.

To remove a soft floor surface

WARNING: Use protective gloves with Kevlar. The blades are very sharp.

Note: Blades with a smaller width cut the floors easier than blades with a larger width. Blades with a larger width are not always better or faster. A blade with a smaller width usually cleans the floor better than a blade with a larger width.

Note: The blades are sharp for a longer time if the work area is clean from unwanted material.

1. Use personal protective equipment. Refer to *Personal protective equipment on page 6*.
2. Install a self scoring blade. Refer to *To select the correct blade dimension and installation position on page 10* and *To replace the blade on page 18*.
3. Make sure that the blade is sharp. Sharpen the blade if it is necessary. Refer to *To sharpen the blade on page 18*.
4. Cut a linear ditch in the floor.

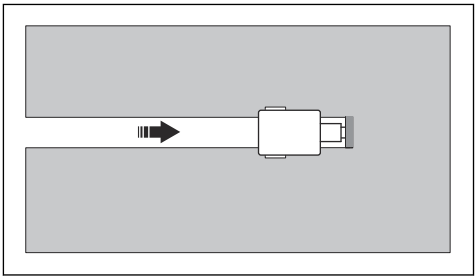

5. Remove the self scoring blade, refer to *To replace the blade on page 18*.
6. Install a flat blade.
7. Start at the ditch and remove the floor.

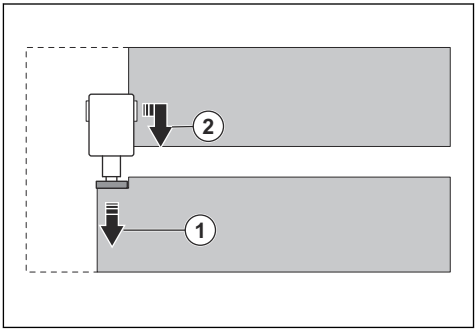

To remove a hard floor surface

WARNING: Use protective gloves with Kevlar. The blades are very sharp.

Note: Blades with a smaller width cut the floors easier than blades with a larger width. Blades with a larger width are not always better or faster. A blade with a smaller width usually cleans the floor better than a blade with a larger width.

Note: The blades are sharp for a longer time if the work area is clean from unwanted material.

For instructions on how to remove tile floors and floors made of wood, refer to *To remove tile floors and floors made of wood on page 14*.

1. Use personal protective equipment. Refer to *Personal protective equipment on page 6*.

2. Install a small width blade of the correct type. Refer to *To select the correct blade dimension and installation position on page 10* and *To replace the blade on page 18*.
3. Make sure that the blade is sharp. Sharpen the blade if it is necessary. Refer to *To sharpen the blade on page 18*.
4. Cut linear ditches in the floor. Make sure that the distance between the ditches is the same as the width of the long blade.

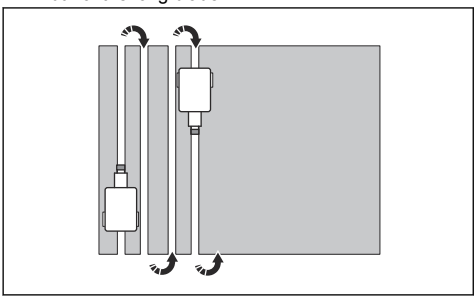

5. Install a blade with a larger width of the correct type. Refer to *To select the correct blade dimension and installation position on page 10* and *To replace the blade on page 18*.
6. Make sure that the blade is sharp. Sharpen the blade if it is necessary. Refer to *To sharpen the blade on page 18*.
7. Remove the floor between the ditches.

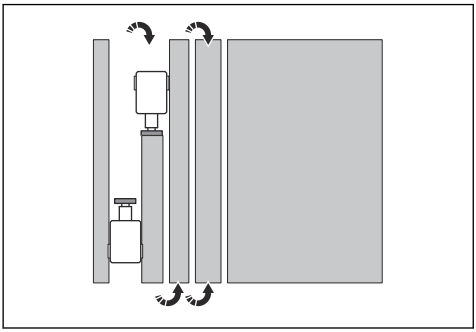

To remove tile floors and floors made of wood

WARNING: Use protective gloves with Kevlar. The blades are very sharp.

Note: Blades with a smaller width cut the floors easier than blades with a larger width. Blades with a larger width are not always better or faster. A blade with a smaller width usually cleans the floor better than a blade with a larger width.

Note: The blades are sharp for a longer time if the work area is clean from unwanted material.

1. Use personal protective equipment. Refer to *Personal protective equipment on page 6*.
2. Install a chisel. Refer to *To replace the blade on page 18*.
3. Make sure that the blade is sharp. Sharpen the blade if it is necessary. Refer to *To sharpen the blade on page 18*.
4. Before operation on floors made of wood, do these steps:
   a) Cut the floor with a circular saw.
   b) Remove nails and other metal objects to prevent damage to the blade.
5. Move the product in a fan shape pattern.

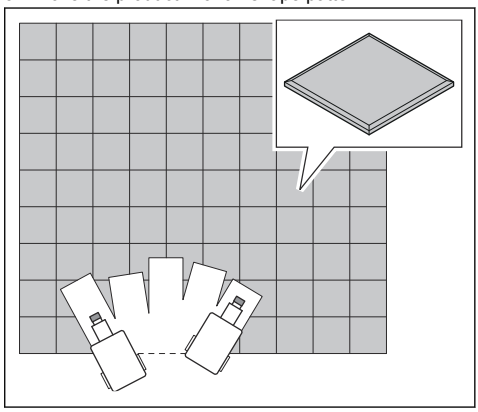

   a) If a tile floor is too hard and the tiles do not come off easily, use a hammer to break the tiles before you use the product.

Blade applications

Floor type	Blade application
VCT – Tile (Vinyl Composition Tile)	Do not use a blade wider than the dimension of the tile being removed. If the tiles do not come up clean or the machine jumps on top of the tiles, install a smaller blade until proper blade size is found or use a smaller portion of the blade.
Vinyl-, Rubber, PVC, Direct glued carpet, Linoleum	The carpet must be scored down (ditching) with a 152mm Self-Scoring blade for correct removal. Pre-scored carpet (ditched) or pre-cut carpet makes the machine easier to control and blades stay sharp longer. Normally 254 mm blades are used on direct glued carpet, secondary backed, unitary, double glued, vinyl foam, urethane foam. Latex foams are easy to remove with a 305 mm blade.
Ceramic (glued with double duty or mud sets)	The ceramic tiles will have to be pre-broken with a mallet or large hammer before removing them with the floorscraper. Use a large hammer to break away enough tiles to create space for the machine or blade to fit in. Or start from a doorway. Use slow speed and small blades or chisel. Keep work area clean to keep good wheel contact with floor.
Wood and wood like floors	Pre-saw the wood with a circular saw. Pound down or remove any nails or metal obstruction to avoid blade damage.
Glued hard wood flooring	For correct removal of hardwood flooring (plank solid, plank laminated, parkay, parquetry laminated), the flooring must be pre-sawed. This is done by using a circular saw set at a depth of 99% of the thickness of the board, just missing the subfloor surface. Draw chalk lines across the floor and pre-saw to blade width. (every 152mm). True parkay flooring scoring is not necessary. It will come up in small pieces. When working over plywood sub-flooring, try to run machine in the same direction as the grain in the wood. Blade in most cases bevel down. On solid wood floors like plank, run in the same direction as the plank, not cross grain or cross plank. Removing the front counterweights will help on all soft surfaces.
Concrete	When working on concrete slab, normal blade position is bevel up for best performance, especially when cleaning adhesive. On occasion, bevel down gives better blade life.

Maintenance

Introduction

WARNING: Before you do maintenance, you must read and understand the safety chapter.

WARNING: Use personal protective equipment when you do servicing and maintenance. Refer to *Personal protective equipment on page 6*.

WARNING: Before you do the maintenance, stop the motor and disconnect the power plug from the power supply. Make sure that all drives stop.

WARNING: Remove the blade or attach the blade guard before you do the maintenance.

For all servicing and repair work on the product, special training is necessary. We guarantee the availability of professional repairs and servicing. If your dealer is not a service agent, speak to them for information about the nearest service agent.

For more detailed information, refer to .

Maintenance schedule

* = General maintenance done by the operator. The instructions are not given in this operator's manual.

X = The instructions are given in this operator's manual.

O = The instructions are not given in this operator's manual. Let an approved service agent do the maintenance.

Maintenance	Daily	Weekly	Each 12 months
Do a check of the all safety devices on the product.	*		
Do a check on the vibration dampening units on the steering handle.	*		
Do a check of the wear and sharpness of the blade.	X		
Make sure that all electric connectors are clean.	X		
Make sure that the motors are clean.	*		
Clean the external surfaces of the product.	X		
Do a general inspection.	X		
Do a check of the lock mechanism and the attachment points of the weights.		*	
Do a check of the vibration dampening units on the cutting head.		X	
Clean the internal components of the product.			O

To do a general inspection

- Make sure that the nuts and screws on the product are tightened.
- Make sure that the cables on the product are not in a position where they can become damaged.
- Examine the electrical parts for damage. Do not operate a product that has damaged electrical parts.

To clean the product

WARNING: Clean the product daily to prevent circulation of dangerous dust.

- Clean the product in an applicable area.
- Use approved protective gloves with Kevlar when you clean the product.
- Clean the external surface with a moist cloth.
- Do not use water on electrical components.
- Do not use a high-pressure washer or compressed air to clean the product.

To replace the vibration damping units BS 75

1. Remove the blade or attach the blade protection. Refer to *To replace the blade on page 18*.

WARNING: Use protective gloves with Kevlar. The blades are very sharp.

2. Remove the weights. Refer to *To disassemble and assemble the product BS 75 on page 23*.
3. Remove the 5 screws.

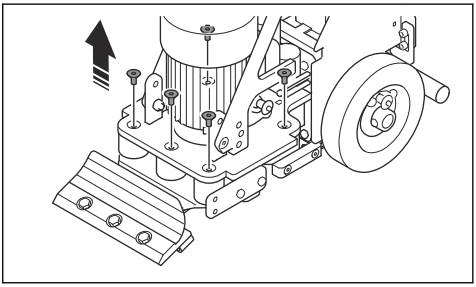

4. Tilt the product rearward. Make sure that the product is stable.

5. Remove the 7 screws.

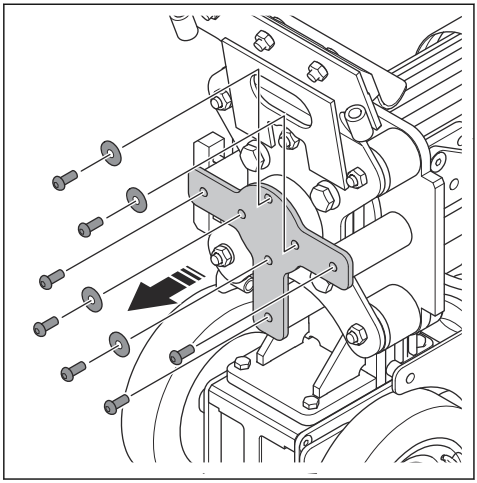

6. Remove central bolt to release bearing hub.
7. Remove the 5 nuts.

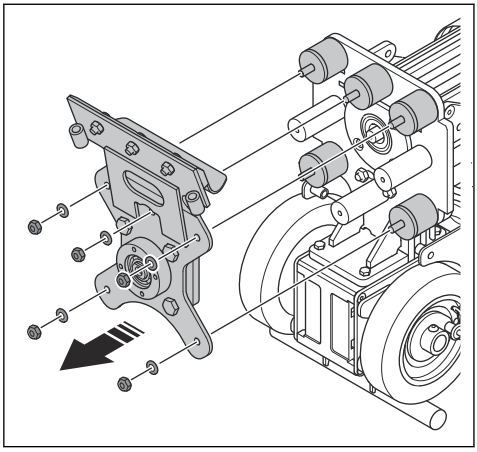

8. Remove the vibration damping plate and the 5 vibration damping units.
9. Install 5 new vibration damping units in the opposite sequence.

To replace the vibration damping units BS 110

1. Remove the blade. Refer to *To replace the blade on page 18*.

WARNING: Use protective gloves with Kevlar. The blades are very sharp.

2. Remove the weights. Refer to *To remove and install the weights BS 110 on page 10*.
3. Remove the 6 screws and the bottom cover.

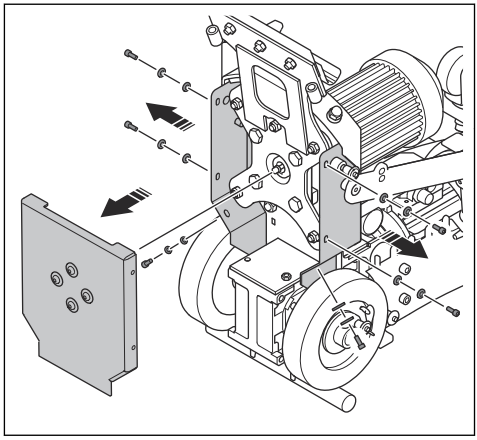

4. Remove the 5 nuts and the cutting head.

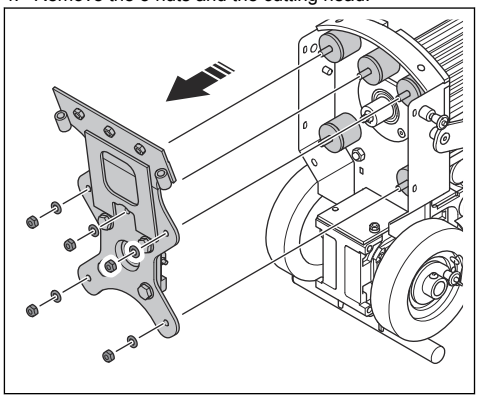

5. Remove the 5 washers (A).

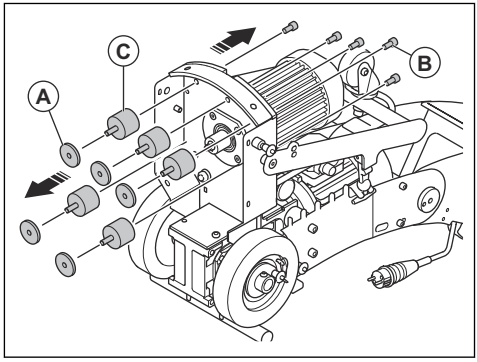

6. Remove the 5 screws (B) and the 5 vibration damping units (C).
7. Install 5 new vibration damping units in the opposite sequence.

To replace the blade

WARNING: Use protective gloves with Kevlar. The blades are very sharp.

1. Lift the front of the product and put a support below the product. Make sure that the blade is lifted from the floor.

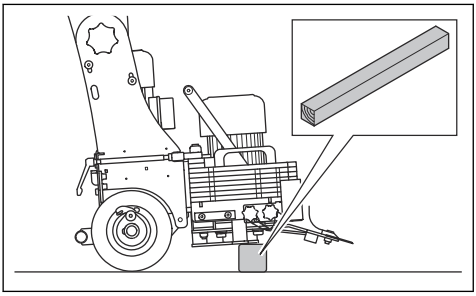

2. Loosen the 3 screws on the tool holder.

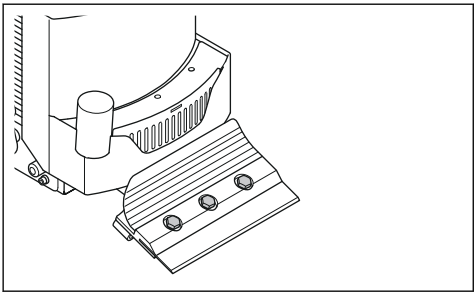

3. Remove the blade.
4. Push the new blade into the tool holder.
5. Make sure that the blade is in the correct position.
6. Tighten the 3 screws on the tool holder.

To sharpen the blade

WARNING: Use protective gloves with Kevlar. The blades are very sharp.

1. Lift the front of the product and put a support below the product. Make sure that the blade is lifted from the floor.

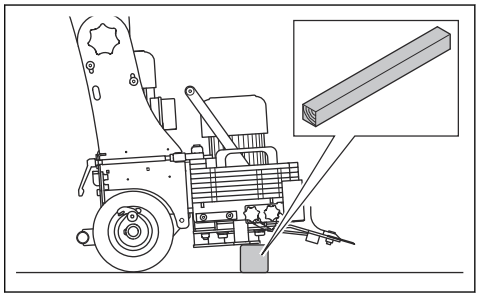

2. Sharpen the blade with an angle grinder. Use a grinding disc with a grit of 120.

WARNING: Make sure that the grinding disc does not catch the edge or corner of the blade.

a) Grind the top edge of the blade for bevel up.

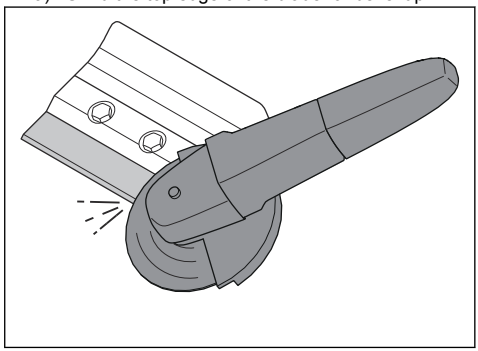

b) Grind the bottom edge of the blade for bevel down.

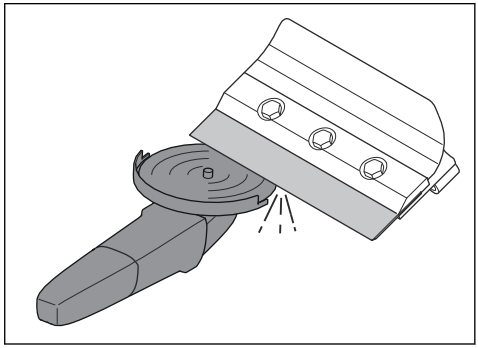

To adjust a drive lever

1. Remove the nut and the screw.

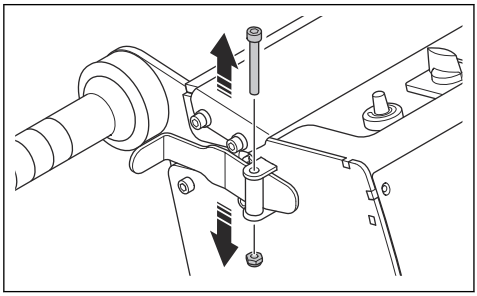

2. Remove the drive lever.

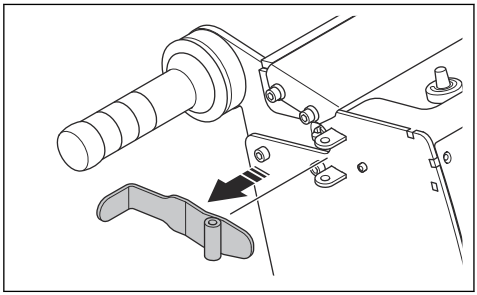

3. Turn the adjustment screw to the correct position.

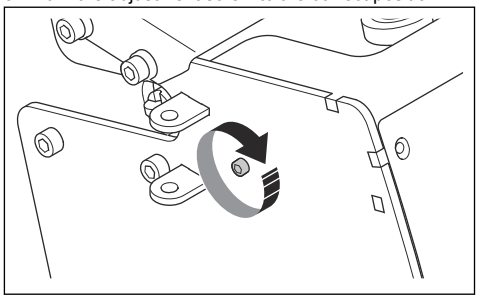

4. Install the drive lever, the screw and the nut.

Troubleshooting

Problem	Cause	Solution
The product does not start.	The extension cable is disconnected.	Connect the extension cable.
	The extension cable is damaged.	Replaced the extension cable.
	Examine the frequency drive for error codes.	Refer to *Error codes on page 20*.
The product is not easy to hold on to.	The vibration damping units are worn or damaged.	Replace the vibration damping units.
	The lower motor bearing is damaged.	Speak to an approved Husqvarna service agent.
	The blade is blunt or not correctly installed.	Do a check of the blade and sharpen or replace it as necessary.
The product is not easy to move.	There is a blockage at the wheel scraper plates or the wheel scraper plates are damaged.	Clean and examine the wheel scraper plates. Replace damaged parts.
	There is a blockage at the wheels or the wheels are damaged.	Clean and examine the wheels. Replace damaged parts.
The frequency drive stops.	The load is too high or the power supply is not sufficient.	Do a check of the power supply.

Problem	Cause	Solution
The vibration motor does not operate correctly.	The lower motor bearing is damaged.	Speak to an approved Husqvarna service agent.

Error codes

The error codes are shown on the display in the electrical enclosure. Refer to *Product overview BS 75 on page 2* or *Product overview BS 110 on page 3* for information about where the electrical enclosure is on your product. For error codes that are not shown in the table, write down the error code and the serial number of the product. Stop the product and speak to your local Husqvarna representative.

Error code	Cause	Solution
USF	The mains voltage is too low.	Do a check of the mains voltage.
	The mains voltage is not constant.	
OSF	The mains voltage is too high.	Stop the product immediately. Do a check of the mains voltage.
OLF	The motor current is too high.	Stop the product and let it become cool. Operate the product with less workload.
nSt	The drive lever is pushed in when the product starts.	Release the forward drive lever and/or the rearward drive lever.
	The drive motor is mechanically locked.	Make sure that there is no blockage in the drive motor and the wheels.
SCF1	There is a short circuit or grounding at the drive output. There is a ground fault during running status. Commutation of motors during running status. There is a current leakage to ground if 2 or more motors are connected in parallel.	Do a check of the cables between the drive and the motor. Do a check of the ground connections and insulation of the motor.
SCF3		
SCF5	There is a short circuit at the output of the product.	
	There is a short circuit at the run order or DC injection order.	
tJF	The temperature of the product is too high.	Make sure that the ventilation in the work area is sufficient.
OHF		Decrease the workload.
		Do a check of the cooling fan.
		Let the product become cool.

Transportation

WARNING: Be careful during transportation. The product is heavy and can cause injury or damage if it falls or moves during transportation.

WARNING: Remove the blade or attach the blade guard before transportation of the product. Use protective gloves with Kevlar. The blades are very sharp.

CAUTION: Do not tow the product behind a vehicle.

The wheels let you move the product manually for shorter distances. Refer to *To transport the product on the wheels BS 75 on page 21* and *To transport the product on the wheels BS 110 on page 21*.

For longer distances, lift the product to move it or put the product on a vehicle. Refer to *To lift the product on page 22* and *To attach the product to a transportation vehicle on page 23*.

- Be very careful when you move the product manually or on surfaces with a slope. Small slopes can result in a strong movement that is not possible to brake by hand.
- Put some type of protection on the product during transportation. The protection keeps natural elements such as rain and snow away from the product.

To transport the product on the wheels BS 75

WARNING: Use protective gloves with Kevlar. The blades are very sharp.

1. Disconnect the power supply.
2. Attach the blade guard.

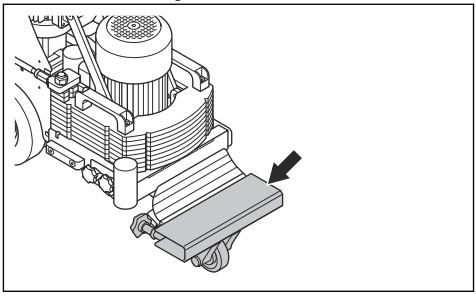

3. Disengage the drive wheels. Refer to *To engage and disengage the drive wheels on page 11*.
4. Push the product slowly.

To transport the product on the wheels BS 110

1. Disconnect the power supply.
2. Remove the blade, refer to *To replace the blade on page 18*.

WARNING: Use protective gloves with Kevlar. The blades are very sharp.

3. Tilt the product until the foot support and the handle are on the floor.

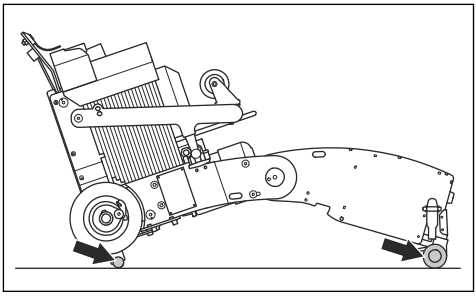

4. Loosen the 2 rubber clamps (A) and move the transport wheel forward.

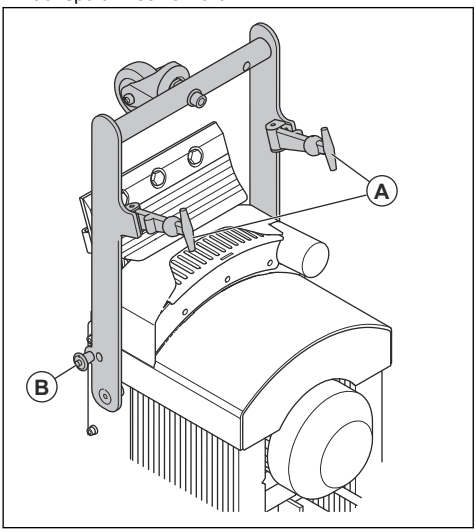

5. Install the locking pins (B) for the transport wheel on the right and the left side.
6. Disengage the drive wheels. Refer to *To engage and disengage the drive wheels on page 11*.
7. Tilt the product by the handle until all 3 wheels are on the floor.
8. Push the product slowly.

To move the product up and down a ramp

WARNING: Be very careful when you move the product up and down ramps with the motor on. The product is heavy and there is a risk of injury if the product falls or moves too quickly.

WARNING: For ramps with a steep slope, always use a winch. Do not stay below or near the product.

WARNING: Do not move the product on steep slopes. Look at the rating plate on the product for information about the maximum slope angle.

- To move the product down a ramp, operate the product rearward slowly.
- To move the product up a ramp, operate the product forward slowly.
- Do not turn the product more than 45° on a ramp.

To lift the product

WARNING: Make sure that the lifting equipment has the correct specification to lift the product safely. The rating plate on the product shows the product weight.

WARNING: Do not walk or stay below or near a lifted product. Keep bystanders away from the risk area.

WARNING: Do not lift a damaged product. Make sure that the lifting point is correctly installed and not damaged.

WARNING: Do not lift the product by the handlebar, motor or chassis.

1. Remove the tool or attach the blade protection cover.

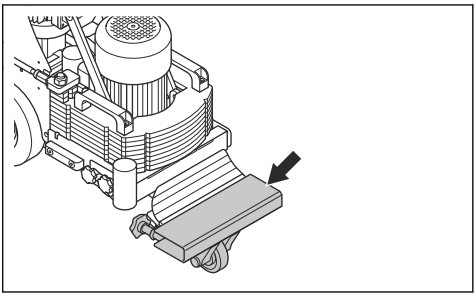

WARNING: Use protective gloves with Kevlar. The blades are very sharp.

2. Make sure that the drive wheels are engaged. Refer to *To engage and disengage the drive wheels on page 11*.
3. Attach the lifting equipment at the lifting point.

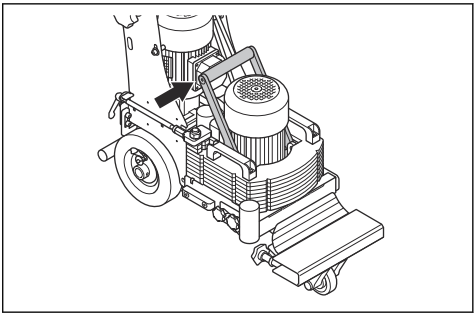

4. Lift the product slowly.

To attach the product to a transportation vehicle

1. Make sure that the drive wheels are engaged. Refer to *To engage and disengage the drive wheels on page 11*.
2. Put the product in storage position. Refer to *To put the product in storage position on page 24*.
3. Attach tie-down straps to the lifting point.

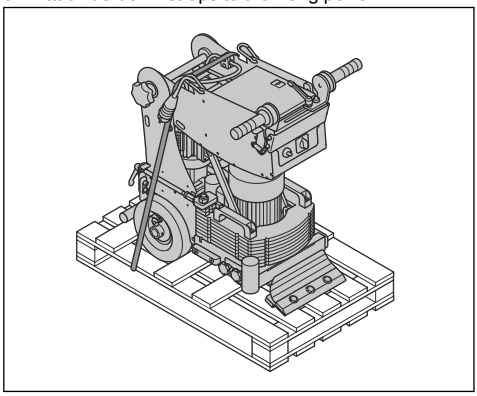

4. Attach and tighten the tie-down straps to the transportation vehicle.
5. Make sure that the product cannot move.

To disassemble and assemble the product BS 75

1. Disconnect the power supply.

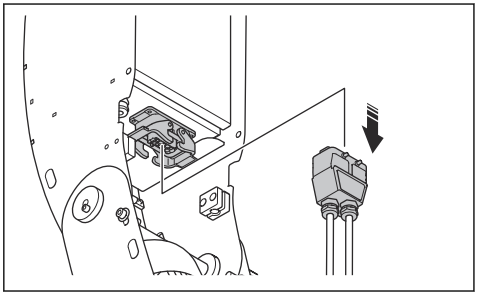

2. Remove the blade, refer to *To replace the blade on page 18*

WARNING: Use protective gloves with Kevlar. The blades are very sharp.

3. Remove the unit with the connection for the dust extractor hose.

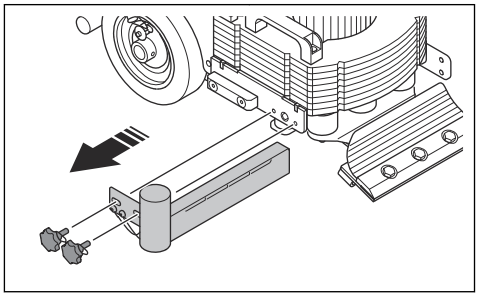

4. Loosen the 2 knobs (A).

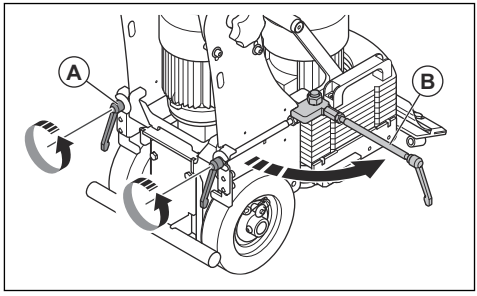

5. Turn the 2 levers forward (B).
6. Move the weight (C) forward.

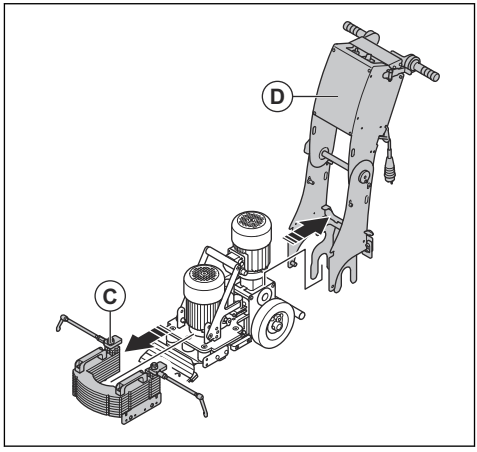

7. Lift the handle unit (D).

8. Tilt the lifting handle (E) forward.

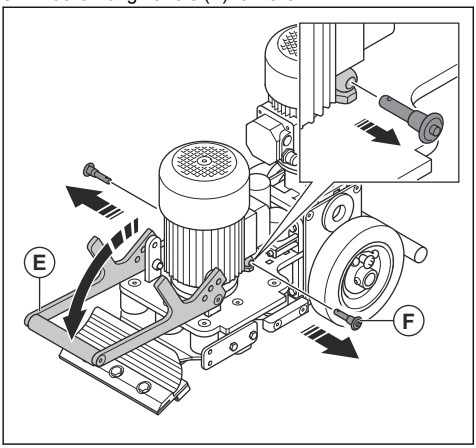

9. Remove the 2 locking pins (F).
10. Lock the lifting handle in the forward position with the locking pins.

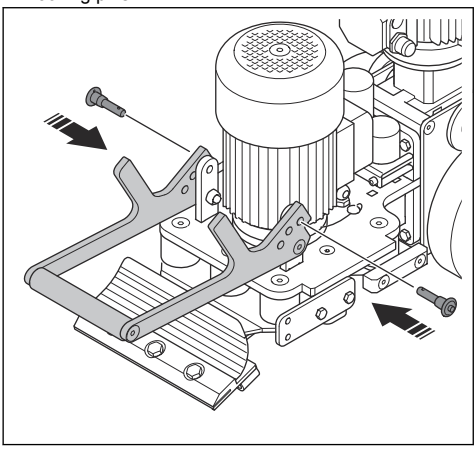

11. Assemble in the opposite sequence.

To put the product in storage position

1. Loosen the handle adjustment knob.

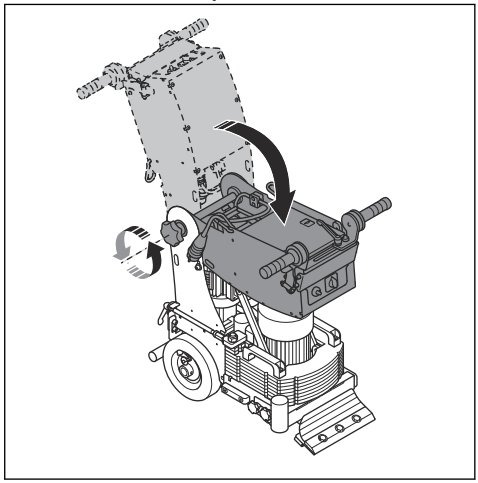

2. Fold the upper part of the handle forward.
3. Tighten the handle adjustment knob.

Storage of the product

- Storage of the product must be indoors only.
- Put the product in storage position. Refer to *To put the product in storage position on page 24*.
- Keep the product in a locked area to prevent access for children or persons that are not approved.
- Keep the product in a dry and frost free area.

Disposal of the product

- Obey the local recycling requirements and applicable regulations.
- When the product no longer is used, send it to a Husqvarna dealer or discard it at a recycling location.

Technical data

	BS 75 1x230V	BS 75 1x110V	BS 110 1x230V	BS 110 1x110V
Market	EU	UK	EU	UK
Rated power, W	1500			
Drive motor power, kW	0.75			
Vibration motor power, kW	0.75			
Rated voltage, V	200-240	110	200-240	110
Rated frequency, Hz	50/60			

	BS 75 1x230V	BS 75 1x110V	BS 110 1x230V	BS 110 1x110V
Rated current, A	16	15	16	15
Cable length, m	0.5			
Power cable type	3x2.5 mm^2			
Forward speed, m/min	2.5–12.3			
Rearward speed, m/min	2.5–24.5			
Maximum cleaning gradeability, deg/%	10/18			
Weight, kg	128		170	
Additional weight, kg	10		N/A	
Working temperature, °C	-10–40			
Diameter connection for dust extraction hose, mm	51			
Dust collector	Speak to a Husqvarna service agent for more information.			

Noise and vibration emissions

	BS 75	BS 110
Noise emission		
Sound power level L_{WA} measured, dB(A)[2]	70	75
Vibration levels		
Vibration level a_h, m/s^2[3]	4.0	4.6

Noise and vibration declaration statement

These declared values were obtained by laboratory type testing in accordance with the stated directive or standards and are suitable for comparison with the declared values of other products tested in accordance with the same directive or standards. These declared values can be used for preliminary risk assessments but values measured in individual work places may be higher. The actual exposure values and risk of harm experienced by an individual user are unique and depend upon the way the user works, in what material the product is used, as well as upon the exposure time and the physical condition of the user, and the condition of the product.

Extension cables

Cable length	Cross section			
	≤ 16 A	≤ 32 A	≤ 63 A	≤ 125 A
Calculated at a pre-fuse GG[4]:	16 amp	32 amp	63 amp	125 amp

[2] Noise emissions in the environment measured as sound power (L_{WA}) in conformity with EN-ISO 11202:2010 and EN-ISO 3437:2010. Uncertainty Kwa 2.5dB.

[3] Vibration level according to EN ISO 20643:2008. Reported data for vibration level has a typical statistical dispersion (standard deviation) of 1 m/s^2.

[4] The cross sections must be re-calculated when other type or dimension pre-fuse are used than is given.

Cable length	Cross section			
	≤ 16 A	≤ 32 A	≤ 63 A	≤ 125 A
> 20m	1.5 mm^2	2.5 mm^2	10 mm^2	25 mm^2
20m > 50m	2.5 mm^2	4 mm^2	10 mm^2	25 mm^2
50m > 75m	4 mm^2	6 mm^2	16 mm^2	35 mm^2

Product dimensions BS 75

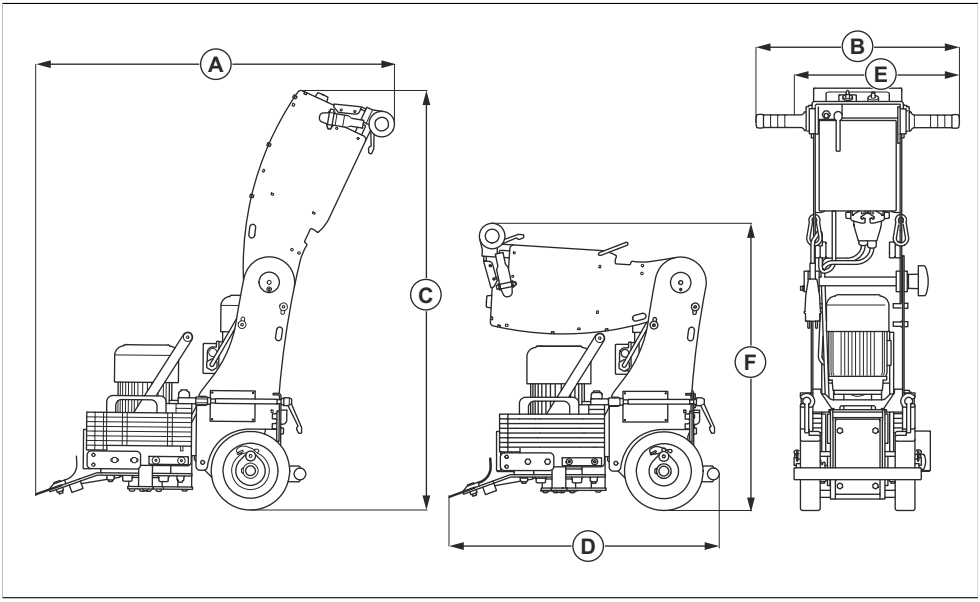

A	Length, mm	872
B	Maximum width, mm	515
C	Height, mm	1069
D	Length with handle folded, mm	654
E	Minimum width, mm	419
F	Height with handle folded, mm	741

Product dimensions BS 110

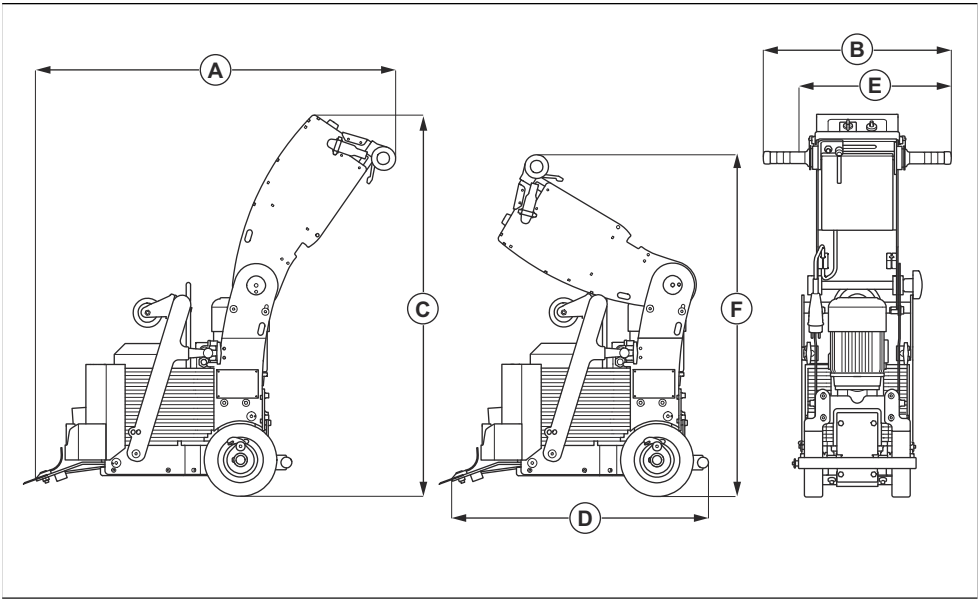

A	Length, mm	956
B	Maximum width, mm	515
C	Height, mm	1069
D	Length with handle folded, mm	738
E	Minimum width, mm	419
F	Height with handle folded, mm	944

Accessories

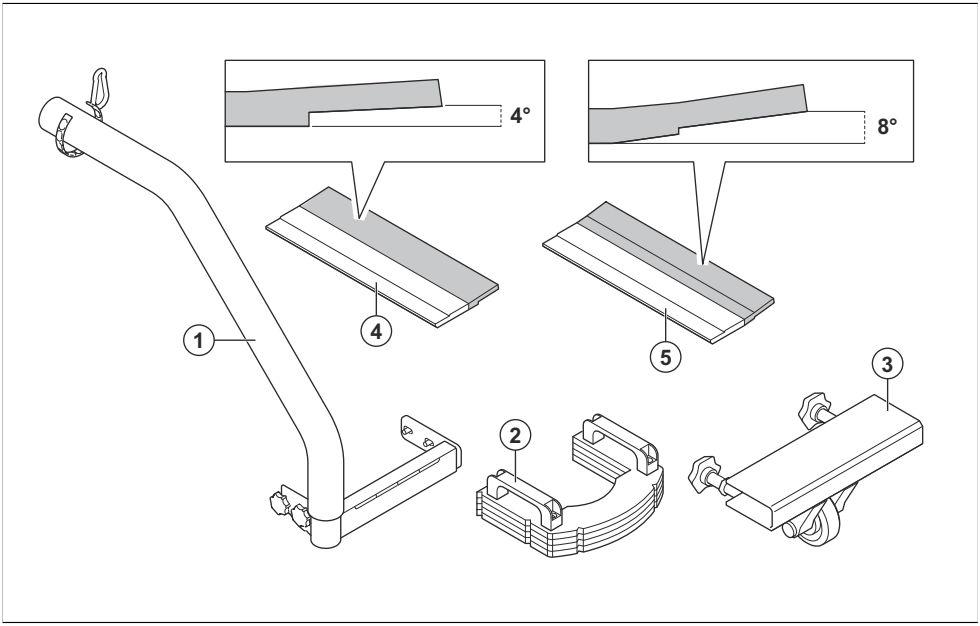

1	Suction hose (BS 75)
2	Weights (BS 75)
3	Blade guard (BS 75)
4	Angle adjustment plate 4º
5	Angle adjustment plate 8º

Blades

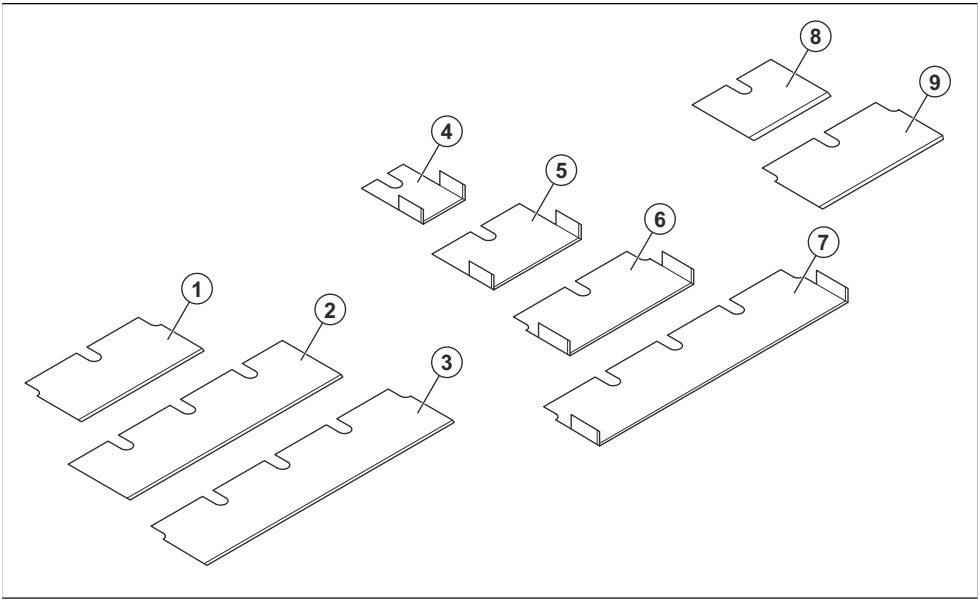

Position	Art. No	Blade
1	540119701	VARI Flat blade 150x70x1.5 (6")
2	540119801	VARI Flat blade 250x70x1.5 (10")
3	540119901	VARI Flat blade 300x70x1.5 (12")
4	540120701	VARI Self Scoring blade 50x70x2.5 (2") outside
5	540120801	VARI Self Scoring blade 100x70x2.5 (4") outside
6	540120501	VARI Self Scoring blade 150x70x1.5 (6") inside
7	540120601	VARI Self Scoring blade 300x70x1.5 (12") inside
8	540120301	VARI Flat blade 100x70x4.5 (4")
9	540120001	VARI Flat blade 150x70x2.5 (6")
10	540211701	TACTI Self Scoring 300x70x1.5 (12") inside

Declaration of Conformity

EU Declaration of Conformity

We, Husqvarna AB, SE-561 82 Huskvarna, Sweden, tel: +46- 36-146500, declare on our sole responsibility that the product:

Description	Scraper 110V
Brand	Husqvarna
Type/Model	BS 75 BS 110
Identification	Serial numbers dating from 2025 and onwards

complies fully with the following EU directives and regulations:

Directive/Regulation	**Description**
2006/42/EC	"relating to machinery"
2014/30/EU	"relating to electromagnetic compatibility"
2011/65/EU	"relating to restriction of hazardous substances"

and that the following standards and/or technical specifications are applied;

EN ISO 12100:2010

EN 60204-1:2018

EN 55014-1:2017

EN 55014-2:1997

EN IEC 63000:2018

Partille, 2025-09-08



Christian Nyberg

Senior Director, R&D Heavy Equipment

Husqvarna AB, Construction Division

Responsible for technical documentation

CE

UK Importer:
Husqvarna UK Ltd
Preston Road, Co. Durham
DL5 6UP

EU Declaration of Conformity

We, Husqvarna AB, SE-561 82 Huskvarna, Sweden, tel: +46- 36-146500, declare on our sole responsibility that the product:

Description	Scraper 230V
Brand	Husqvarna
Type/Model	BS 75 BS 110
Identification	Serial numbers dating from 2025 and onwards

complies fully with the following EU directives and regulations:

Directive/Regulation	**Description**
2006/42/EC	"relating to machinery"
2014/30/EU	"relating to electromagnetic compatibility"
2011/65/EU	"relating to restriction of hazardous substances"

and that the following standards and/or technical specifications are applied;

EN ISO 12100:2010

EN 60204-1:2018

EN 55014-1:2017

EN 55014-2:1997

EN 61000-3-2:2014

EN 61000-3-3:2013

EN IEC 63000:2018

Partille, 2025-09-08



Christian Nyberg

Senior Director, R&D Heavy Equipment

Husqvarna AB, Construction Division

Responsible for technical documentation

CE

UK Importer:
Husqvarna UK Ltd
Preston Road, Co. Durham
DL5 6UP

Inhalt

Einleitung.....32
Sicherheit.....35
Betrieb.....39
Wartung.....47
Fehlersuche.....51
Transport, Lagerung und Entsorgung.....52
Technische Daten.....56
Zubehör.....60
Konformitätserklärung.....62

Einleitung

Gerätebeschreibung

Das Gerät ist ein handgeführter Bodenabzieher für Oberflächen unterschiedlicher Härte.

Verwendungszweck

Das Gerät wird verwendet, um Oberflächenmaterialien mit unterschiedlicher Härte von Betonböden, Holzböden und weichen Unterböden zu entfernen. Verwenden Sie das Gerät zum Entfernen von Hartholz, Keramik, Linoleum, PVC, Teppich, Klebstoffe und Leim. Verwenden Sie das Gerät nicht für andere Aufgaben.

Das Gerät ist für die industrielle Verwendung durch professionelle Bediener vorgesehen.

Geräteübersicht BS 75

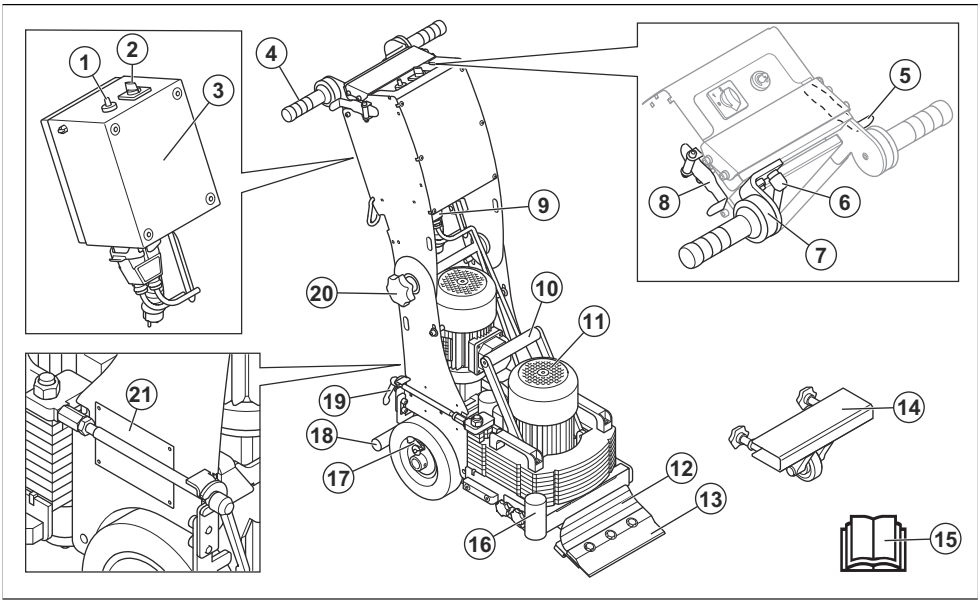

1. Drehzahlregelung
2. Start-/Stopp-Schalter und Funktionswahlschalter
3. Schaltkasten
4. Stoßdämpfender Handgriff
5. Vorwärtshebel
6. Klemmhebel für verstellbaren Handgriff
7. Verstellbarer Griff
8. Rückwärtshebel
9. Stromanschluss
10. Hebegriff
11. Vibrationsmotor
12. Werkzeughalter
13. Glättflügel
14. Trennscheibenschutz
15. Bedienungsanleitung
16. Anschluss für Staubabsaugschlauch
17. Antriebsrad mit Sperrstift
18. Stützfuß